Note to editor:

Direct simple shear tests have been used in the world practice of geotechnical research for several decades. Nevertheless, this method is not widely used in Russia. This article is part of the series on the dispersed soils laboratory testing and is dedicated to the direct simple shear tests, that could replace the more common direct shear tests.

Direct Simple Shear and Simple Shear Tests

Mirnyy A.Y., Lomonosov Moscow State University, Moscow, Russia
Idrisov I.H., GEOTEK R&D Enterprise LLC, Penza, Russia

The simplicity and reliability of the apparatus design have determined the wide use of direct shear testing equipment for engineering-geological surveys in Russia. Nevertheless, structurally fixed shear surface has a number of disadvantages. The main of them is a significant variety of shear strength values, often encountered in soil samples with large inclusions.

The destruction of any heterogeneous material will occur along the most energetically favorable path. If some inclusion with high strength appeares on a structurally fixed shear surface, then the sliding surface will bend around it. The result of this particular experiment will be an overestimated value of ultimate shear strength, which hampers the following statistical processing: some of the tests have to be discarded, and the calculated values of shear strength parameters decrease relatively to the standard ones.

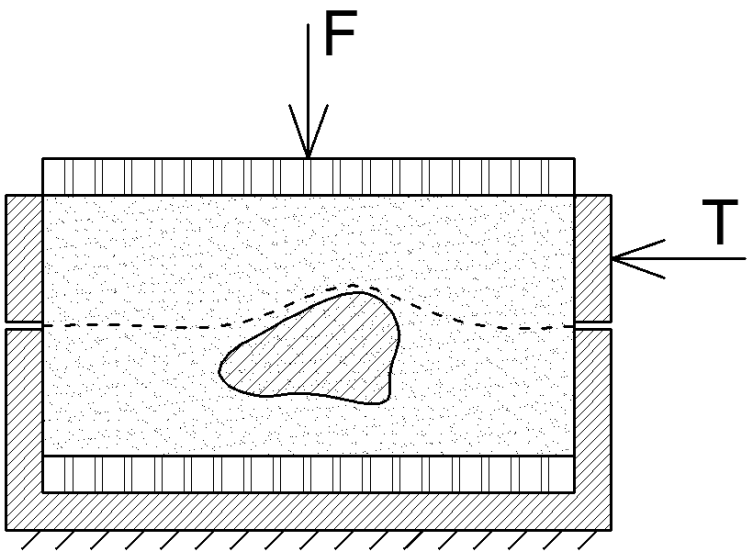

Shape distortion of the sliding surface in the presence of large inclusions in the sample

This problem does not appear with direct simple shear testing, where the position of the shear surface is not structurally fixed. Its position is determined by the heterogeneity of the specimen. This makes it possible to improve the quality of the heterogeneous (for example, in morainal and coarse-grained soils) or structurally anisotropic soils with expressed stratification (the shear surface will pass in the weakest stratum) parameters determination.

The term “direct simple shear – DSS”, which is pretty common, is not precise enough for a Russian-speaking specialist. It is known from the course of strength of materials, that *shearing* is a type of deformation by which in any cross section acts only transverse force. If the direction of the forces in two sections, the distance between which is negligible, are different (as by cutting with scissors), there is in fact a *shear* along a single plane. If we increase the distance between the sections under consideration, between them there will be a *distortion*, a change in the angles. In this case an infinite number of shear planes will be formed. This situation is called “*simple shear”*. Shearing stresses act only on two opposite faces of the elementary volume, and all other faces are strainless. Finally, there is a concept of “*pure shear”,* when shearing stresses act on all faces of elementary volume. But such tests are rarely carried out for soils.

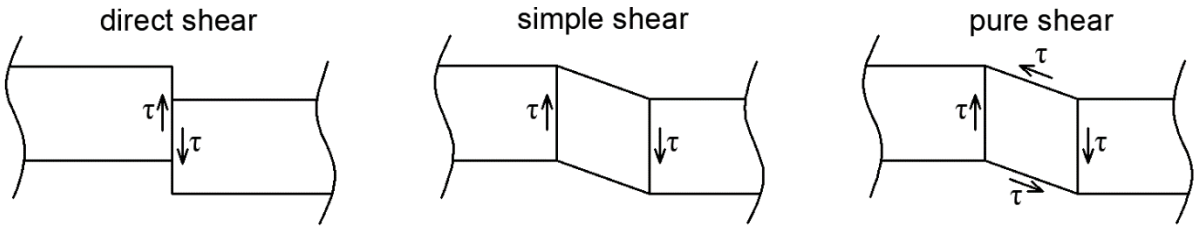

Shear, Simple Shear and Pure Shear Schemes

In the case of isotropic solid body with the distortion (simple shear) the mutual displacement of every two adjacent sections in the limits of the section under consideration will be identical. However, for the soils with structural heterogeneities (and, as a consequence, with heterogeneous stiffness and strength), the mutual displacement of individual sections will be not necessarily identical, if there is no rigid kinematic connection between them. Thus, most of the simple shear instruments are not really such - it would be more correct to call them direct simple shear instruments or multiplanar shear instruments.

Direct simple shear instruments, like the previously considered direct shear ones, can be built using schemes with movable upper or lower shear boxes. However, the boxes do not touch each other directly. There is a stack of thin polished rings between them. The sample in the form of a cylinder is placed in an elastic membrane inside the rings. The membrane is necessary to prevent splitting of the stack. At the start of the test, the rings are positioned strictly vertically.

During the loading, mutual displacement of the rings occurs and it is not necessarily identical. In fact, a separate sliding surface can be formed between each pair of rings. This design makes it possible to neutralize the influence of structural heterogeneities of the sample. The processing of test results is carried out completely the same as by the direct shear testing instruments.

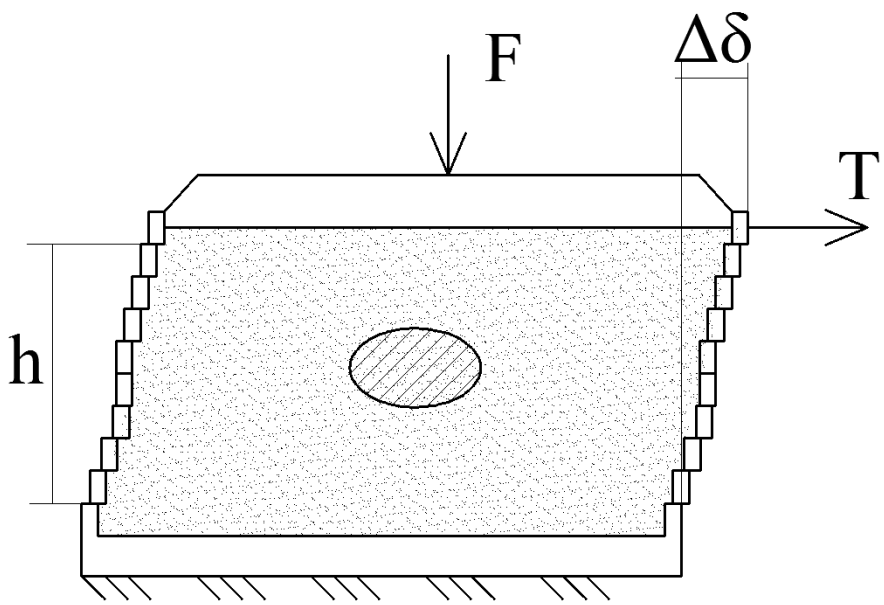

Unequal displacement of separate rings of the instrument caused by a rigid inclusion in the sample

Nevertheless, there are also designs that realize a strict simple shear, i.e., provide an equal mutual displacement of layers of the sample. This can be achieved by introducing an additional kinematic connection between the separate rings in the stack. GEOTEK R&D Enterprise LLC uses this principle in the development.

The design developed at the Norwegian Geotechnical Institute (NGI) by L. Bjerrum and A. Landva (1966) is also well-known. The authors used an elastic membrane reinforced with a metal spiral as the outer walls. Thus, each separate loop served as one of the rings in the stack, and the spiral provided a kinematic connection between the individual loops. Each design has its own advantages and disadvantages, that are discussed in the specialized literature.

Regardless of realization, these instruments exceed the direct shear ones in many parameters. In particular, they ensure a good repeatability of experiments for the soils with heterogeneous structure and make it possible to carry out the undrained tests with the measurement of pore pressure due to the use of an elastic membrane. In addition to determining the shear strength parameters, they can be used for undrained tests, determination of the dilatancy angle, dynamic tests. We are going to describe the additional capabilities of this class of instruments in the next publication.

As part of the automated test complex “ASIS Pro” GEOTEK R&D Enterprise LLC offers instruments that implement direct simple shear and distortion. These instruments are made for various sample sizes, up to the coarse-grained. The complex includes shear boxes with the possibility of static and kinematic load application. The instruments allow to perform tests by any method with permanent automatic recording of test parameters. Furthermore, compactors for preliminary compaction of samples before the consolidated-drained shear are offered in addition to the instruments.

More detailed technical information can be given by the company's specialists or found on the website www.npp-geotek.com.

ASIS for direct shear strength tests of rock